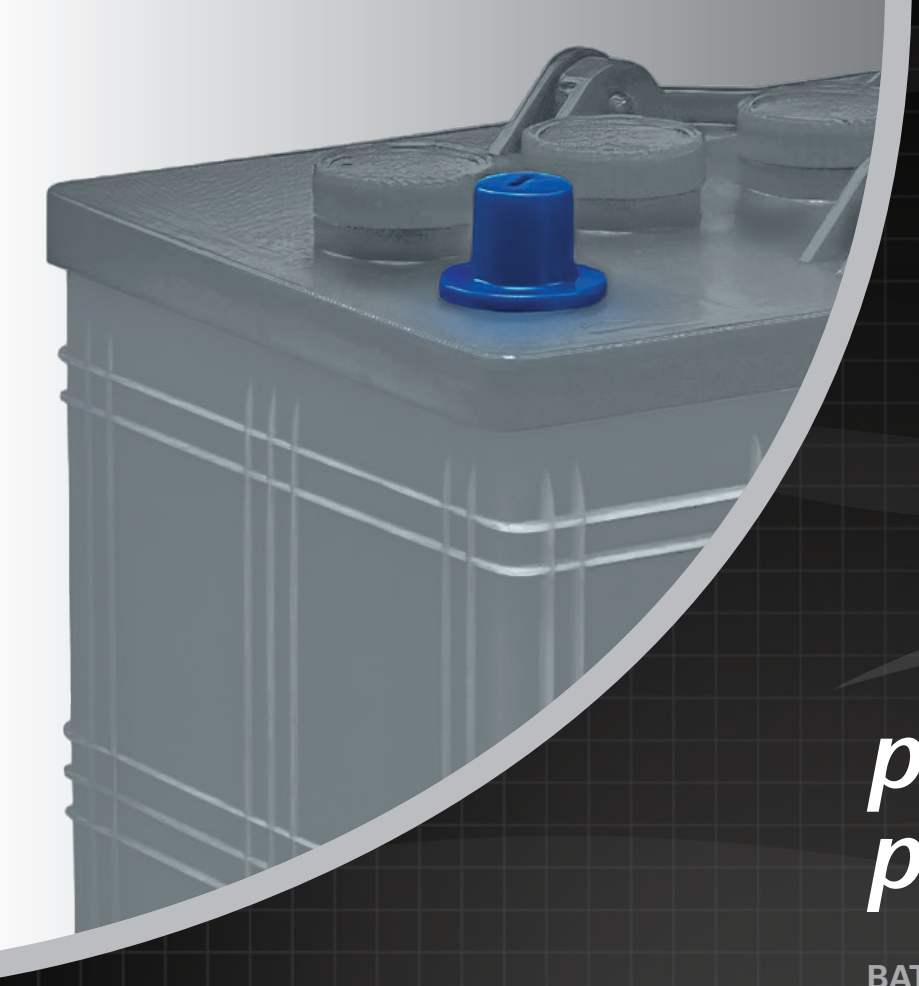

powerbloc™ & powerbloc™ dry

BATTERY TECHNOLOGIES

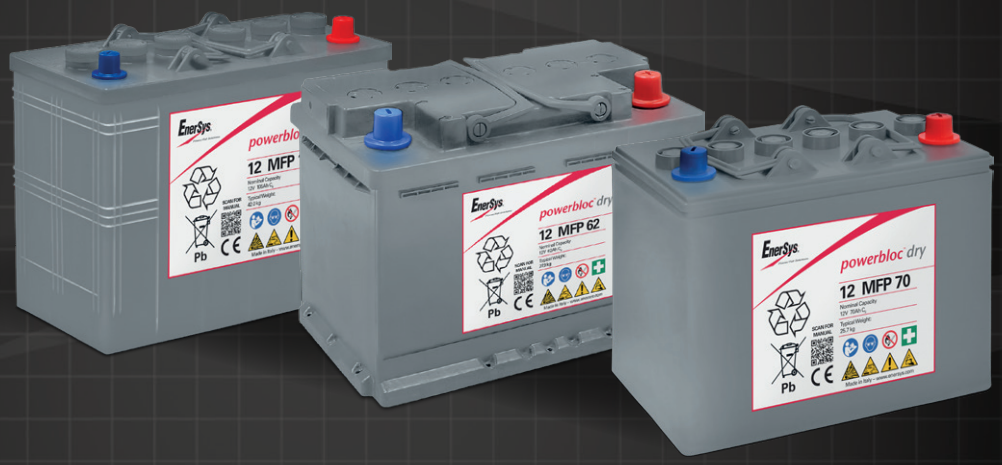

EnerSys®
Power/Full Solutions

STANDARD BATTERY SOLUTIONS

powerbloc™ & powerbloc™ dry

BATTERY TECHNOLOGIES

BIGGER POWER —
FOR SMALL TRACTION

POWERBLOC™ & POWERBLOC™ DRY BATTERIES

With exceptional performance offering longer run-time and low maintenance, powerbloc™ batteries provide efficient and user-friendly energy solutions across various applications. Specifically designed for small to medium traction tasks, these batteries supply the necessary energy to operate essential equipment without the need for frequent maintenance or early replacement.

MORE CHARGING FLEXIBILITY

Keep your operations running with our high-frequency charging range. IMPAQ™, NexSys®+ and NexSys COMpact™ high-frequency battery chargers charge faster and efficiently manage the energy replenishment of your powerbloc™ batteries.

EVEN MORE APPLICATIONS

The powerbloc™ battery range is suitable for use in the following applications:

- Cleaning machines
- Pallet trucks
- Industrial electric vehicles
- Aerial platforms
- Automated Guided Vehicles (AGV)
- Wheelchairs
- Golf carts

MAX DURABILITY

Increased capacity means longer run time.

HIGH RELIABILITY

Integrated plug-and-play power systems with compatible components from one trusted supplier.

LOW RISK

System power and performance with ownership costs verified before purchase and a warranty you can count on.

EnerSys®
Power/Full Solutions

BENEFITS

POWERBLOC™ TP BATTERIES

- Experience unparalleled durability with the powerbloc™ TP battery series, featuring robust tubular positive plates and free electrolyte for a prolonged operating life.
- Enjoy premium construction that ensures robust performance, delivering optimal run-times even in the most demanding applications.
- Benefit from extended performance and runtime, maximizing your machine's effectiveness to its fullest potential.

POWERBLOC™ FPT BATTERIES

- Discover extended service life with the powerbloc™ FPT battery series, featuring advanced flat grid plates and paste formulation alongside free electrolyte.
- Experience enhanced performance with an advanced separator design and paste formulation, resulting in extended running times and reduced maintenance needs.
- Maximize productivity with superior performance, ensuring more productive run-times for your operations.

POWERBLOC™ DRY MFP BATTERIES

- Experience hassle-free operation with the powerbloc™ Dry MFP batteries, featuring grid plates in a special alloy and gel electrolyte for maintenance-free performance.
- Enjoy peace of mind with electrolyte immobilized in a gel, ensuring you can focus on your tasks without worrying about battery upkeep.
- Benefit from high current capability, reduced self-discharge, and resilience to temperature variations, guaranteeing reliable performance in diverse conditions.

EnerSys
Power/Full Solutions

POWERBLOC™ BATTERY TECHNICAL DATA

POWERBLOC™ TP BATTERIES

Type	Voltage [V]	C_5 [Ah]	C_{20} [Ah]	Dimensions [max. mm]			Weight [kg]	N° of cycles[1)] 80% DoD	Polarity[2)]	Terminal[3)]
				L	W	H				
6 TP 175	6	175	230	262	182	274	30.2	1100	1	AP
6 TP 210	6	205	260	244	190	274	32.1	1100	1	AP
12 TP 70	12	70	90	308	176	218	25.5	1100	1	AP
12 TP 90	12	90	120	345	171	233	28.6	1100	1	AP
12 TP 110	12	115	150	345	171	284	38.7	1100	1	AP

POWERBLOC™ FPT BATTERIES

Type	Voltage [V]	C_5 [Ah]	C_{20} [Ah]	Dimensions [max. mm]			Weight [kg]	N° of cycles[1)] 80% DoD	Polarity[2)]	Terminal[3)]
				L	W	H				
6 FPT 185	6	185	237	260	180	277	27.8	700	1	UT
6 FPT 195	6	195	250	261	181	278	29.2	700	1	UT
6 FPT 210	6	210	269	263	179	291	31.7	700	1	UT
6 FPT 215	6	215	275	297	181	293	33.2	700	1	UT
6 FPT 255	6	255	326	316	180	368	41.2	700	1	UT
6 FPT 305	6	305	390	312	182	418	50.6	700	1	UT
8 FPT 145	8	145	186	262	181	278	28.7	700	1	UT
12 FPT 85	12	85	109	323	172	232	26.6	700	2	DT
12 FPT 105	12	105	134	349	171	248	29	700	2	DT
12 FPT 120	12	120	150	350	180	278	39.2	700	2	UT
12 FPT 150	12	150	192	394	176	374	49.6	700	1	UT

Dimensions: +/- 2 mm | Overall Height | Weight: +/- 5%
1) Maximum 80% of DoD (depth of discharge).
2) Polarity variants, see next page.
3) Terminal configuration, see next page.

EnerSys
Power/Full Solutions

POWERBLOC™ BATTERY TECHNICAL DATA

POWERBLOC™ DRY MFP BATTERIES											
Type	Voltage [V]	C_5 [Ah]	C_{20} [Ah]	Dimensions [max. mm]			Weight [kg]	N° of cycles[1)] 60% DoD	N° of cycles[1)] 80% DoD	Polarity[2)]	Terminal[3)]
				L	W	H					
6 MFP 180	6	180	240	245	190	275	33.6	700	500	1	AP
12 MFP 50	12	50	65	278	175	190	22.1	700	500	1	AP
12 MFP 62	12	62	80	353	175	190	27.9	700	500	1	AP
12 MFP 70	12	70	85	264	172	234	25.7	700	500	1	AP
12 MFP 80	12	77	88	329	172	234	29.9	700	500	2	AP
12 MFP 105	12	105	135	347	172	285	42.0	700	500	1	AP

Dimensions: +/- 2 mm | Overall Height | Weight: +/- 5%
1) Maximum 80% of DoD (depth of discharge).
2) Polarity variants, see table below.
3) Terminal configuration, see table below.

Variants of Polarity or Enhanced Compatibility:

Batteries with different polarity options provide enhanced compatibility with a wide range of devices. This means you can easily find a battery that fits your specific electronic devices, reducing the hassle of searching for the right battery type.

Terminal Configurations or Optimized Connectivity:

Diverse terminal configurations ensure optimized connectivity for various devices. This translates to easier installation and a more reliable connection, ultimately leading to improved performance and longer-lasting battery life for your devices.

Variants of Polarity			
	1	2	3
6 V	+ –	– +	
8 V	– +		
12 V	– +	+ –	+ –

Terminal Configuration	
	Automotive Post (AP)
	Universal Terminal (UT)
	Dual Terminal (DT)

With batteries tailored to fundamental customer needs, like different polarity requirements and terminal configurations, customers benefit from the enhanced convenience, compatibility, and optimized performance.

EnerSys
Power/Full Solutions

ABOUT ENERSYS®

OUR SOLUTIONS PUT TOTAL POWER IN MOTION FOR YOUR BUSINESS

● EnerSys® Direct ▲ EnerSys® Partner HQ EnerSys® EMEA Headquarters EnerSys® Motive Power Production

Enersys® is the global leader in stored energy solutions for industrial applications and designs, manufactures, and distributes energy systems solutions and motive power batteries, specialty batteries, battery chargers, power equipment, battery accessories and outdoor equipment enclosure solutions to customers worldwide.

Enersys® Motive Power solutions form a complete, turnkey power system to make your operations more productive and profitable. Motive Power batteries and chargers are utilized in electric forklift trucks and other industrial electric powered vehicles requiring stored energy solutions.

Enersys® also provides aftermarket and customer support services to its customers in over 100 countries through its sales and manufacturing locations around the world.

Wherever you are in Europe, EnerSys® is within reach and ready to support your fleet with 40+ Service locations.

- 24/7 coverage from 150+ authorized service technicians
- Tailored service contracts to your requirements
- Proactive cloud-based monitoring and real-time service scheduling
- Comprehensive maintenance reporting and monitoring plans

EnerSys®
Power/Full Solutions

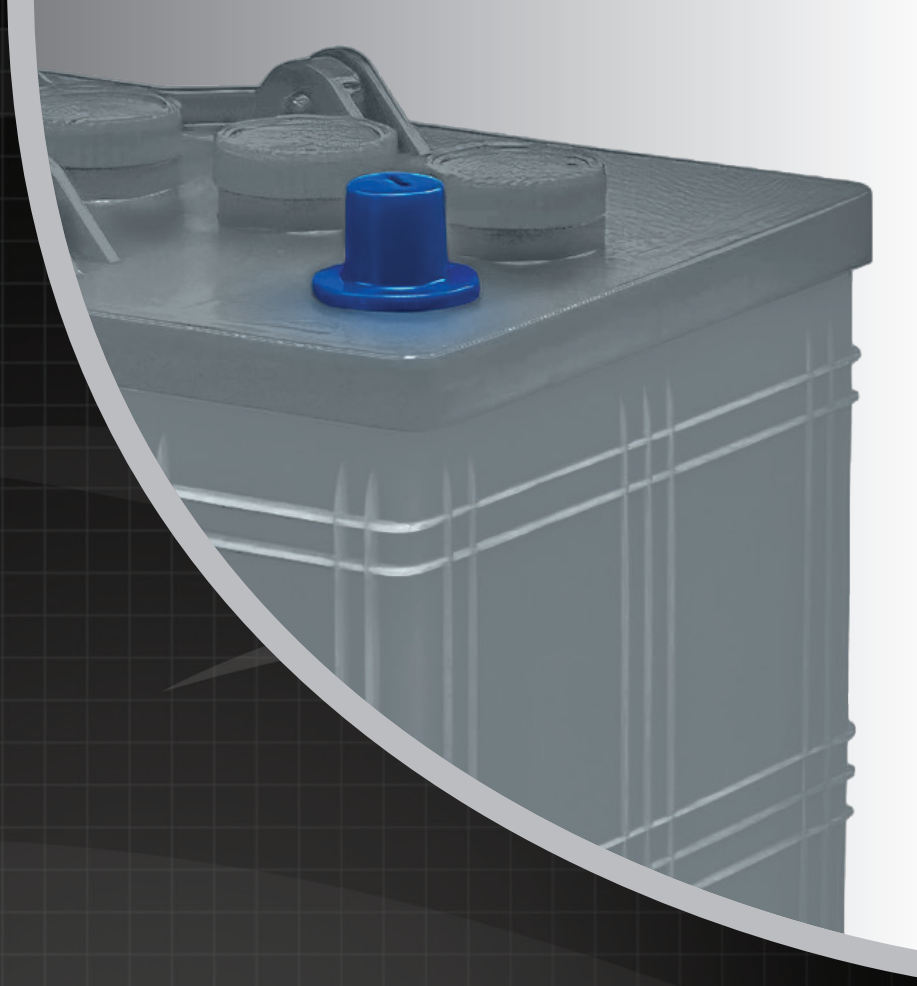

SERVICE AND SUPPORT

Our battery support services range from system design, installation and certification to testing, maintenance and repair.

Our comprehensive recycling support program accepts lead acid batteries of all sizes, from all manufacturers.

BATTERY MONITORING

Our advanced tools and technologies deliver actionable intelligence to optimize battery maintenance and operation.

World Headquarters
2366 Bernville Road
Reading, PA 19605
USA
+1-610-208-1991 / +1-800-538-3627

EnerSys EMEA
EH Europe GmbH
Baarerstrasse 18
6300 Zug Switzerland
+41 44 215 74 10

EnerSys APAC
No. 85, Tuas
Avenue 1,
Singapore 639518
+65 6558 7333

EnerSys Limited
Oak Court, Wynne Avenue
Swinton, Manchester, M27 8FF
United Kingdom
+44 161 794 4611

© 2026 EnerSys. All rights reserved. Trademarks and logos are the property of EnerSys and its affiliates unless otherwise noted. Subject to revisions without prior notice. E.&O.E.

EMEA-EN-PG-PB-0126

www.enersys.com